WACHENDORFF
The Encoder Experts

Online Data sheet

Encoder WDGP 36S

www.wachendorff-automation.com/wdgp36s

Wachendorff Automation

... systems and encoders

- Complete systems
- Industrial rugged encoders to suit your application
- Standard range and customer versions
- Maximum permissible loads
- 48-hour express production
- Made in Germany
- Worldwide distributor network

IndustrieROBUST

Encoder WDGP 36S

Illustration similar

- Due to high quality electronics any number of pulses up to 16384
- Protection class IP67, at shaft input IP65
- High output frequency up to 1 MHz
- Reverse polarity protection and short-circuit protection at 4.75 VDC to 32 VDC

www.wachendorff-automation.com/wdgp36s

Resolution	
Pulses per revolution PPR	1 PPR up to 16384 PPR

Mechanical Data	
Flange	screw flange
Starting torque nut	max. 8 Nm
Flange material	aluminum, incl. nut M20 x 1.5
Housing material	stainless steel
Flange diameter	Ø 36 mm [Ø 1.417"]

Shaft(s)	
Shaft material	stainless steel
Starting torque	approx. 0.3 Ncm [0.425 in-ozf] at ambient temperature
Shaft	Ø 6 mm [Ø 0.236"]
Shaft length	L: 13 mm [0.512"]
Max. Permissible shaft loading radial	80 N [8.157 kp]
Max. Permissible shaft loading axial	50 N [5.098 kp]

Bearings	
Bearings type	2 precision ball bearings
Nominale service life	1.4 x 10'8 revs. at 100 % rated shaft load 2 x 10'9 revs. at 40 % rated shaft load 1.7 x 10'10 revs. at 20 % rated shaft load
Max. operating speed	12000 rpm

Machinery Directive: basic data safety integrity level	
$MTTF_d$	1200 a
Mission time (TM)	25 a
Nominale service life (L10h)	1.7 x 10'10 revs. at 20 % rated shaft load and 12000 rpm
Diagnostic coverage (DC)	0 %

Electrical Data	
Power supply/Current consumption	4,75 VDC up to 32 VDC: typ. 80 mA
Operating principle	magnetic
Output circuit	HTL HTL, inv. TTL TTL, RS422 compatible, inv.
Pulse frequency	HTL up to 16384 ppr: max. 600 kHz TTL up to 16384 ppr: max. 1 MHz
Channels	ABN and inverted signals
Load	max. 40 mA / channel
Circuit protection	inverse-polarity and short-circuit protection
Set zero pulse:	Set: SET = +UB for 2 s Deaktivate: SET = GND

Accuracy	
Phase offset	90° ± max. 8.5 % of the period duration
pulse-/pause-ratio	50 % ± max. 7 %

Environmental data	
ESD (DIN EN 61000-4-2):	8 kV
Burst (DIN EN 61000-4-4):	2 kV
includes EMC:	DIN EN 61000-6-2 DIN EN 61000-6-3
Vibration: (DIN EN 60068-2-6)	50 m/s^2 (10 Hz up to 2000 Hz)
Shock: (DIN EN 60068-2-27)	1000 m/s^2 (6 ms)
Electrial Safety:	DIN EN 61010-1 (VDE 0411-1) / IEC 61010-1 / UL 61010-1 / CSA C22.0 No 61010-1-12

Duty information	
Customs tariff number:	90318020
Country of origin:	Germany

General Data	
Weight	approx. 130 g [4.586 oz]
Connections	cable or connector outlet
Protection rating (EN 60529)	Housing: IP65, IP67; shaft sealed: IP65; cable outlet K1: IP40
Operating temperature	Connector: -40 °C up to +85 °C, Cable: -20 °C up to +80 °C. Connector: -40 °F up to +185 °F, Cable: -4 °F up to +176 °F.
Storage temperature	Connector: -40 °C up to +100 °C, Cable: -30 °C up to +80 °C Connector: -40 °F up to +212 °F, Cable: -22 °F up to +176 °F

More Information
General technical data and safety instructions **http://www.wachendorff-automation.com/gtd**
Options **http://www.wachendorff-automation.com/acc**

Cable connection L2 axial with 2 m cable

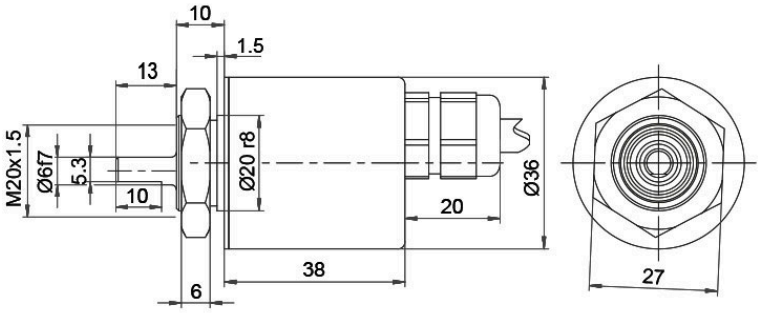

Alle Abmessungen in mm / All dimensions in mm

Description		ABN inv. poss.
L2	axial, shield connected to encoder housing	•

Assignments		
	L2	**L2**
Circuit	M13, M14	N13, N14
GND	WH	WH
(+) Vcc	BN	BN
A	GN	GN
B	YE	YE
N	GY	GY
SET	PK	PK
A inv.	RD	-
B inv.	BK	-
N inv.	VT	-
Shield	flex	flex

Cable connection L3 radial with 2 m cabel

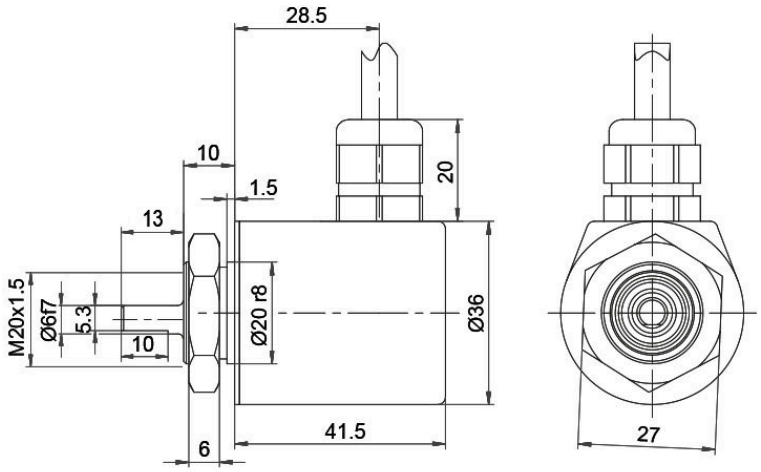

Alle Abmessungen in mm / All dimensions in mm

Description		ABN inv. poss.
L3	radial, shield connected to encoder housing	•

Assignments		
	L3	**L3**
Circuit	M13, M14	N13, N14
GND	WH	WH
(+) Vcc	BN	BN
A	GN	GN
B	YE	YE
N	GY	GY
SET	PK	PK
A inv.	RD	-
B inv.	BK	-
N inv.	VT	-
Shield	flex	flex

Cable K1 (IP40) radial with 2 m cable

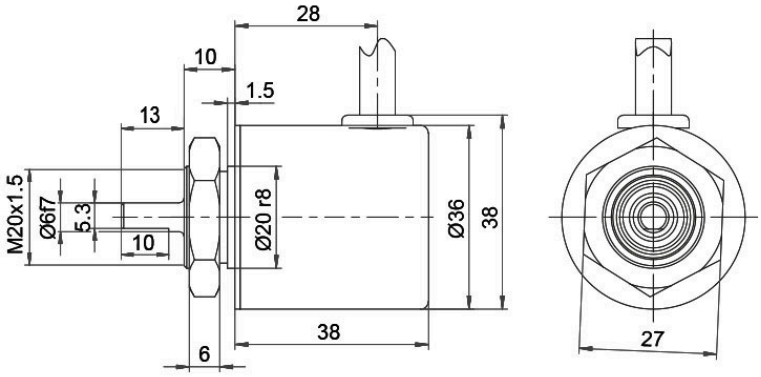

Alle Abmessungen in mm / All dimensions in mm

Description		ABN inv. poss.
K1	radial, shield not connected (IP40)	•

Assignments		
	K1	**K1**
Circuit	M13, M14	N13, N14
GND	WH	WH
(+) Vcc	BN	BN
A	GN	GN
B	YE	YE
N	GY	GY
SET	PK	PK
A inv.	RD	-
B inv.	BK	-
N inv.	VT	-
Shield	flex	flex

Sensor connector (M12x1) SB axial, 12-pin

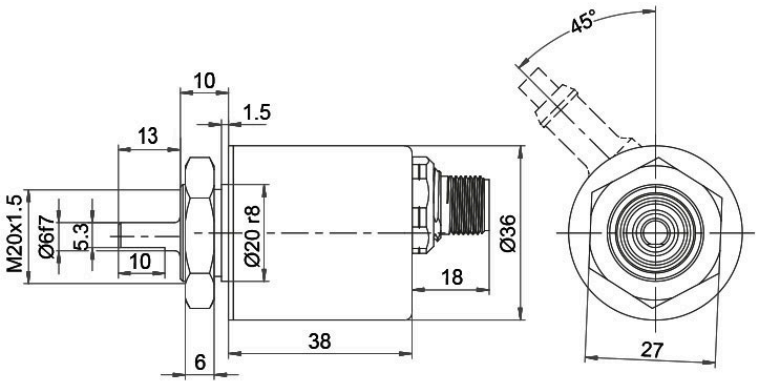

Alle Abmessungen in mm / All dimensions in mm

Description	ABN inv. poss.
SB12 axial, 12-pin, Connector connected to encoder housing	•

Assignments	
	SB12
	12-pin
	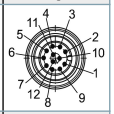
Circuit	M13, M14
GND	3
(+) Vcc	1
A	4
B	6
N	8
SET	5
A inv.	9
B inv.	7
N inv.	10
n. c.	2, 11, 12
Shield	-

Sensor connector (M12x1) SC radial, 12-pin

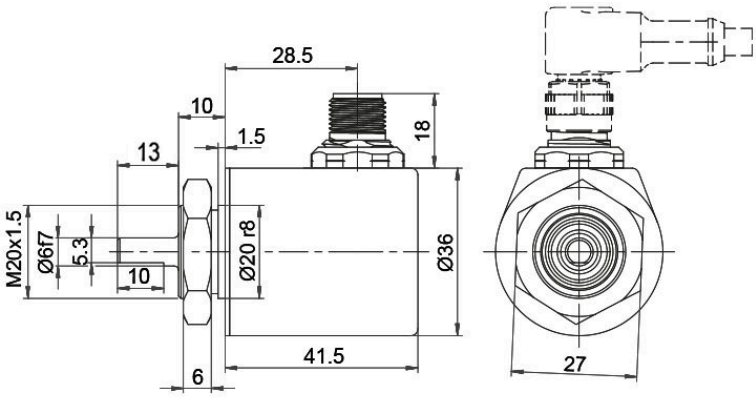

Alle Abmessungen in mm / All dimensions in mm

Description	ABN inv. poss.
SC12 radial, 12-pin, Connector connected to encoder housing	•

Assignments	
	SC12
	12-pin
	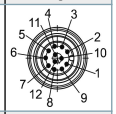
Circuit	M13, M14
GND	3
(+) Vcc	1
A	4
B	6
N	8
SET	5
A inv.	9
B inv.	7
N inv.	10
n. c.	2, 11, 12
Shield	-

Options

Low-friction bearings	Order key
The encoder WDGP 36S is also available as a particularly smooth-running low-friction encoder. The starting torque is thereby changed to ≤ 0.25 Ncm [0.354 in-ozf] and the protection class at the shaft input to IP50.	**AAC**

Pressure equalising membrane	Order key
The WDGP 36S shaft encoder is also optionally available with a pressure equalising membrane. This prevents water from penetrating into the encoder housing in the case of high air humidity. The IP67 protection level, temperature range and salt spray resistance are maintained. Resistant to chemicals and solvents in accordance with DIN EN ISO 2812-1.	**ACR**

Cable length	Order key
The encoder WDGP 36S can be supplied with more than 2 m cable. The maximum cable length depends on the supply voltage and the frequency; see https://www.wachendorff-automation.com/download-gtd-incremental-encoders/ Please extend the standard order code with a three figure number, specifying the cable length in decimetres. Example: 5 m cable = 050	**XXX = Decimeter**

Example Order No.	Type	Your encoder
WDGP 36S	WDGP 36S	WDGP 36S
	Shaft	
06	06	
	Pulses per revolution PPR:	
16384	1-16384 Other PPRs on request	
	Channels:	
ABN	ABN	
	Output circuit	

	Resolution PPR	Power supply VDC	Output circuit	-	Order key
M13	1-16384	4.75 - 32	HTL, inv. set zero pulse	-	M13
		4.75 - 32	TTL, RS422 compatible, inv. set zero pulse	-	M14
		4.75 - 32	HTL set zero pulse	-	N13
		4.75 - 32	TTL set zero pulse	-	N14

	Electrical connections		
L2	**Description**	**ABN inv. poss.**	**Order key**
	Cable: length (2 m standard, WDG 58T: 1 m)		
	radial, shield not connected (IP40)	•	K1
	axial, shield connected to encoder housing	•	L2
	radial, shield connected to encoder housing	•	L3
	Connector: (shield connected to encoder housing)		
	sensor-connector, M12x1, 12-pin, axial	•	SB12
	sensor-connector, M12x1, 12-pin, radial	•	SC12

	Options		
	Description	**Order key**	
	Low-friction bearings	AAC	
	Pressure equalising membrane	ACR	
	Without option	Empty	
	Cable length	XXX = Decimeter	

Example Order No.=	WDGP 36S	06	16384	ABN	M13	L2		WDGP 36S							Your encoder

For further information please contact our local distributor.
Here you find a list of our distributors worldwide.
https://www.wachendorff-automation.com/contact-en/wachendorff-world-wide/

Wachendorff Automation GmbH & Co. KG
Industriestrasse 7 • 65366 Geisenheim
Germany

Phone: +49 67 22 / 99 65 25
E-Mail: wdg@wachendorff.de
www.wachendorff-automation.de