WACHENDORFF
The Encoder Experts

Online Data sheet

Encoder WDGP 58A

www.wachendorff-automation.com/wdgp58a

Wachendorff Automation

... systems and encoders

- Complete systems
- Industrial rugged encoders to suit your application
- Standard range and customer versions
- Maximum permissible loads
- 48-hour express production
- Made in Germany
- Worldwide distributor network

IndustrieROBUST

Encoder WDGP 58A

Illustration similar

- Due to high quality electronics any number of pulses up to 16384
- Protection class IP67, at shaft input IP65
- High output frequency up to 1 MHz
- Reverse polarity protection and short-circuit protection at 4.75 VDC to 32 VDC

www.wachendorff-automation.com/wdgp58a

Resolution	
Pulses per revolution PPR	1 PPR up to 16384 PPR

Mechanical Data	
Flange	synchro flange
Flange material	aluminum
Housing material	stainless steel
Flange diameter	Ø 58 mm [Ø 2.283"]

Shaft(s)	
Shaft material	stainless steel
Starting torque	approx. 1 Ncm [1.416 in-ozf] at ambient temperature
Shaft	Ø 6 mm [Ø 0.236"]
Shaft length	L: 12 mm [0.472"]
Max. Permissible shaft loading radial	125 N [12.746 kp]
Max. Permissible shaft loading axial	120 N [12.236 kp]
Shaft	Ø 8 mm [Ø 0.315"]
Shaft length	L: 19 mm [0.748"]
Max. Permissible shaft loading radial	125 N [12.746 kp]
Max. Permissible shaft loading axial	120 N [12.236 kp]
Shaft	Ø 9.525 mm [Ø 3/8"] Order No: 4Z
Shaft length	L: 20 mm [0.787"]
Max. Permissible shaft loading radial	220 N [22.433 kp]
Max. Permissible shaft loading axial	120 N [12.236 kp]
Shaft	Ø 10 mm [Ø 0.394"]
Shaft length	L: 20 mm [0.787"]
Max. Permissible shaft loading radial	220 N [22.433 kp]
Max. Permissible shaft loading axial	120 N [12.236 kp]

Bearings	
Bearings type	2 precision ball bearings
Nominale service life	1 x 10'9 revs. at 100 % rated shaft load 1 x 10'10 revs. at 40 % rated shaft load 1 x 10'11 revs. at 20 % rated shaft load
Max. operating speed	8000 rpm

Machinery Directive: basic data safety integrity level	
$MTTF_d$	1200 a
Mission time (TM)	25 a
Nominale service life (L10h)	1 x 10'11 revs. at 20 % rated shaft load and 8000 rpm
Diagnostic coverage (DC)	0 %

Electrical Data	
Power supply/Current consumption	4,75 VDC up to 32 VDC: typ. 80 mA
Operating principle	magnetic
Output circuit	HTL HTL, inv. TTL TTL, RS422 compatible, inv.
Pulse frequency	HTL up to 16384 ppr: max. 600 kHz TTL up to 16384 ppr: max. 1 MHz
Channels	ABN and inverted signals
Load	max. 40 mA / channel
Circuit protection	inverse-polarity and short-circuit protection
Set zero pulse:	Set: SET = +UB for 2 s Deaktivate: SET = GND

Accuracy	
Phase offset	90° ± max. 8.5 % of the period duration
pulse-/pause-ratio	50 % ± max. 7 %

Environmental data	
ESD (DIN EN 61000-4-2):	8 kV
Burst (DIN EN 61000-4-4):	2 kV
includes EMC:	DIN EN 61000-6-2 DIN EN 61000-6-3
Vibration: (DIN EN 60068-2-6)	50 m/s^2 (10 Hz up to 2000 Hz)
Shock: (DIN EN 60068-2-27)	1000 m/s^2 (6 ms)
Electrial Safety:	DIN EN 61010-1 (VDE 0411-1) / IEC 61010-1 / UL 61010-1 / CSA C22.0 No 61010-1-12

Duty information	
Customs tariff number:	90318020
Country of origin:	Germany

General Data	
Weight	approx. 240 g [8.466 oz]
Connections	cable or connector outlet
Protection rating (EN 60529)	Housing: IP65, IP67; shaft sealed: IP65; cable outlet K1: IP40
Operating temperature	Connector: -40 °C up to +85 °C, Cable: -20 °C up to +80 °C. Connector: -40 °F up to +185 °F, Cable: -4 °F up to +176 °F.
Storage temperature	Connector: -40 °C up to +100 °C, Cable: -30 °C up to +80 °C Connector: -40 °F up to +212 °F, Cable: -22 °F up to +176 °F

More Information
General technical data and safety instructions **http://www.wachendorff-automation.com/gtd**
Options **http://www.wachendorff-automation.com/acc**

Cable connection L2 axial with 2 m cable

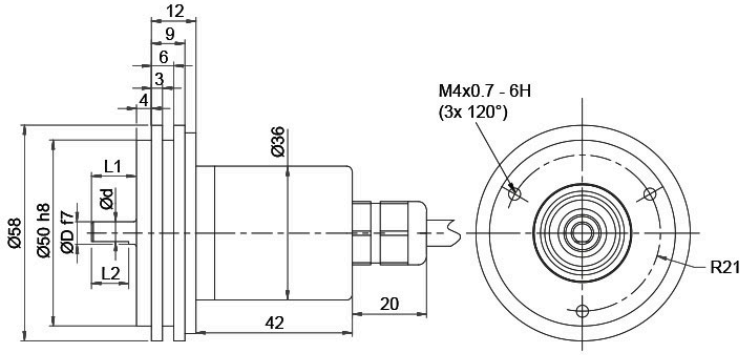

D = 6, L1 = 12, d = 5.3, L2 = 10
D = 8, L1 = 19, d = 7.5, L2 = 15
D = 10, L1 = 20, d = 9, L2 = 15
D = 3/8", L1 = 20, d = 8.3, L2 = 10

Option AIX:
D = 6, L1 = 10, d = 5.3, L2 = 8

Alle Abmessungen in mm / All dimensions in mm

Description		ABN inv. poss.
L2	axial, shield connected to encoder housing	•

Assignments		
	L2	**L2**
Circuit	M13, M14	N13, N14
GND	WH	WH
(+) Vcc	BN	BN
A	GN	GN
B	YE	YE
N	GY	GY
SET	PK	PK
A inv.	RD	-
B inv.	BK	-
N inv.	VT	-
Shield	flex	flex

Cable connection L3 radial with 2 m cabel

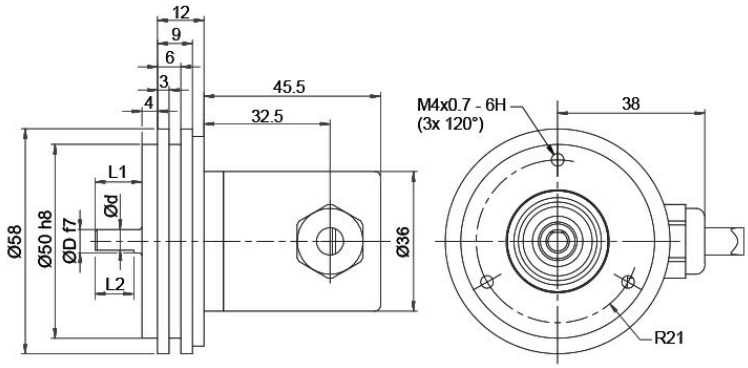

D = 6, L1 = 12, d = 5.3, L2 = 10
D = 8, L1 = 19, d = 7.5, L2 = 15
D = 10, L1 = 20, d = 9, L2 = 15
D = 3/8", L1 = 20, d = 8.3, L2 = 10

Option AIX:
D = 6, L1 = 10, d = 5.3, L2 = 8

Alle Abmessungen in mm / All dimensions in mm

Description		ABN inv. poss.
L3	radial, shield connected to encoder housing	•

Assignments		
	L3	**L3**
Circuit	M13, M14	N13, N14
GND	WH	WH
(+) Vcc	BN	BN
A	GN	GN
B	YE	YE
N	GY	GY
SET	PK	PK
A inv.	RD	-
B inv.	BK	-
N inv.	VT	-
Shield	flex	flex

Cable K1 (IP40) radial with 2 m cable

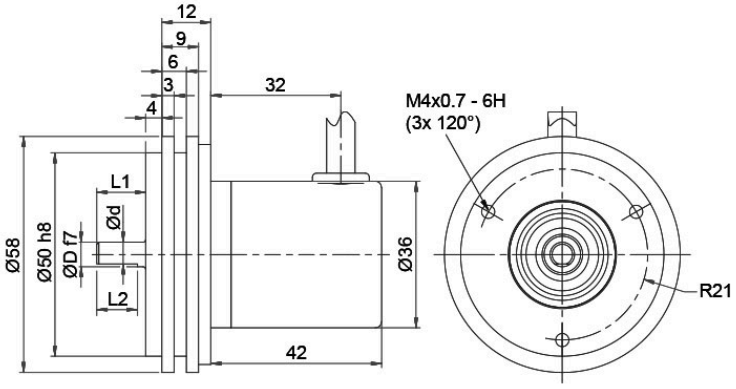

D = 6, L1 = 12, d = 5.3, L2 = 10
D = 8, L1 = 19, d = 7.5, L2 = 15
D = 10, L1 = 20, d = 9, L2 = 15
D = 3/8", L1 = 20, d = 8.3, L2 = 10

Option AIX:
D = 6, L1 = 10, d = 5.3, L2 = 8

Alle Abmessungen in mm / All dimensions in mm

Description		ABN inv. poss.
K1	radial, shield not connected (IP40)	•

Assignments		
	K1	**K1**
Circuit	M13, M14	N13, N14
GND	WH	WH
(+) Vcc	BN	BN
A	GN	GN
B	YE	YE
N	GY	GY
SET	PK	PK
A inv.	RD	-
B inv.	BK	-
N inv.	VT	-
Shield	flex	flex

Sensor connector (M12x1) SB axial, 12-pin

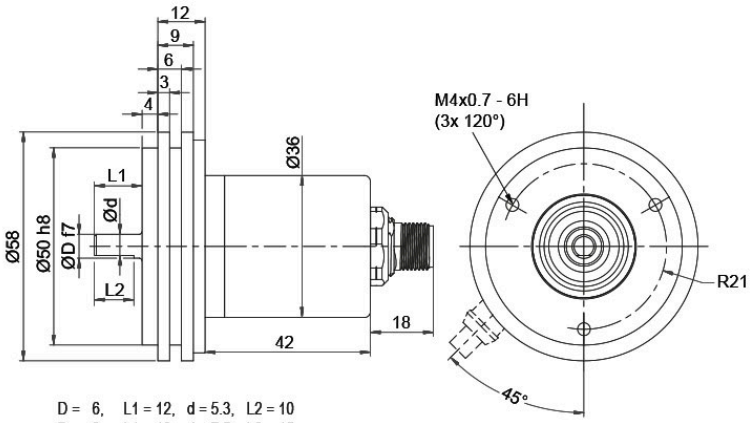

D = 6, L1 = 12, d = 5.3, L2 = 10
D = 8, L1 = 19, d = 7.5, L2 = 15
D = 10, L1 = 20, d = 9, L2 = 15
D = 3/8", L1 = 20, d = 8.3, L2 = 10

Option AIX:
D = 6, L1 = 10, d = 5.3, L2 = 8

Alle Abmessungen in mm / All dimensions in mm

Description	ABN inv. poss.
SB12 axial, 12-pin, Connector connected to encoder housing	•

Assignments	
	SB12
	12-pin
	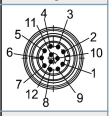
Circuit	M13, M14
GND	3
(+) Vcc	1
A	4
B	6
N	8
SET	5
A inv.	9
B inv.	7
N inv.	10
n. c.	2, 11, 12
Shield	-

Sensor-connector (M12x1) SC radial, 12-pin

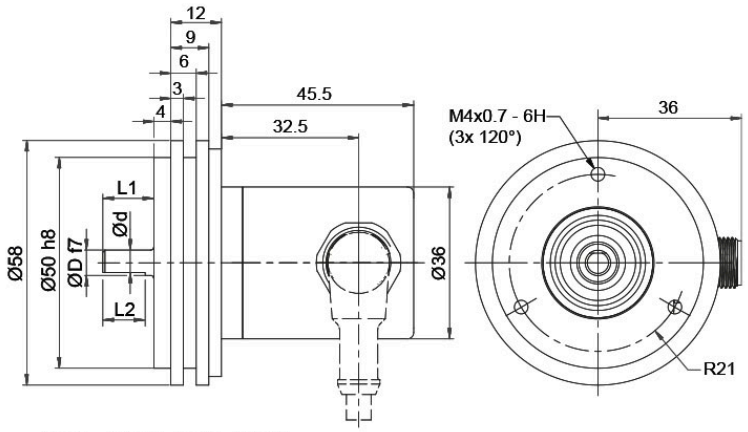

D = 6, L1 = 12, d = 5.3, L2 = 10
D = 8, L1 = 19, d = 7.5, L2 = 15
D = 10, L1 = 20, d = 9, L2 = 15
D = 3/8", L1 = 20, d = 8.3, L2 = 10

Option AIX:
D = 6, L1 = 10, d = 5.3, L2 = 8

Alle Abmessungen in mm / All dimensions in mm

Description	ABN inv. poss.
SC12 radial, 12-pin, Connector connected to encoder housing	•

Assignments	
	SC12
	12-pin
	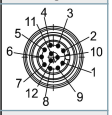
Circuit	M13, M14
GND	3
(+) Vcc	1
A	4
B	6
N	8
SET	5
A inv.	9
B inv.	7
N inv.	10
n. c.	2, 11, 12
Shield	-

Options

Low-friction bearings	Order key
The encoder WDGP 58A is also available as a particularly smooth-running low-friction encoder. The starting torque is thereby changed to ≤ 0.5 Ncm [0.708 in-ozf] and the protection class at the shaft input to IP50.	**AAC**

Shafts sealed to IP67	Order key
The encoder WDGP 58A can be supplied in a IP67 version. (full IP67 only connection SB, SC, L2 or L3 version; not cable connection K1 = IP40). Max. RPM: 3500 min'-1 Permitted Shaft-Loading: axial 100 N [10.197 kp]; radial 110 N [11.216 kp] Starting-torque: approx. 4 Ncm [5.664 in-ozf] at ambient temperature	**AAO**

Shaft length 10 mm [0.394"] (Ø 6 mm [0.236"])	Order key
The encoder WDGP 58A shaft: Ø 6 mm [0.236"] is also available with a shortened shaft L = 10 mm [0.394"] .	**AIX**

Cable length	Order key
The encoder WDGP 58A can be supplied with more than 2 m cable. The maximum cable length depends on the supply voltage and the frequency; see https://www.wachendorff-automation.com/download-gtd-incremental-encoders/ Please extend the standard order code with a three figure number, specifying the cable length in decimetres. Example: 5 m cable = 050	**XXX = Decimeter**

Example Order No.	Type	Your encoder
WDGP 58A	WDGP 58A	WDGP 58A
	Shaft	
06	06; 08; 4Z; 10	
	Pulses per revolution PPR:	
16384	1-16384 Other PPRs on request	
	Channels:	
ABN	ABN	
	Output circuit	

	Resolution PPR	Power supply VDC	Output circuit	-	Order key
M13	1-16384	4.75 - 32	HTL set zero pulse	-	N13
		4.75 - 32	TTL set zero pulse	-	N14
		4.75 - 32	HTL, inv. set zero pulse	-	M13
		4.75 - 32	TTL, RS422 compatible, inv. set zero pulse	-	M14

	Electrical connections		
L2	**Description**	**ABN inv. poss.**	**Order key**
	Cable: length (2 m standard, WDG 58T: 1 m)		
	radial, shield not connected (IP40)	•	K1
	axial, shield connected to encoder housing	•	L2
	radial, shield connected to encoder housing	•	L3
	Connector: (shield connected to encoder housing)		
	sensor-connector, M12x1, 12-pin, axial	•	SB12
	sensor-connector, M12x1, 12-pin, radial	•	SC12

	Options		
	Description	**Order key**	
	Low-friction bearings	AAC	
	Shafts sealed to IP67	AAO	
	Shaft length 10 mm [0.394"] (Ø 6 mm [0.236"])	AIX	
	Without option	Empty	
	Cable length	XXX = Decimeter	

Example Order No.=	WDGP 58A	06	16384	ABN	M13	L2		WDGP 58A							Your encoder

For further information please contact our local distributor.
Here you find a list of our distributors worldwide.
https://www.wachendorff-automation.com/contact-en/wachendorff-world-wide/

Wachendorff Automation GmbH & Co. KG
Industriestrasse 7 • 65366 Geisenheim
Germany

Phone: +49 67 22 / 99 65 25
E-Mail: wdg@wachendorff.de
www.wachendorff-automation.de