WACHENDORFF
The Encoder Experts

Online Data sheet

Encoder WDGI 58C

www.wachendorff-automation.com/wdgi58c

Wachendorff Automation

... systems and encoders

- Complete systems
- Industrial rugged encoders to suit your application
- Standard range and customer versions
- Maximum permissible loads
- 48-hour express production
- Made in Germany
- Worldwide distributor network

IndustrieROBUST

Encoder WDGI 58C

Illustration similar

- Rugged industrial standard encoder
- Housing cap die cast aluminum, with particularly eco-friendly powder coating
- Up to 25000 PPR by use of high grad electronics
- Protection to IP67, shaft sealed to IP65
- High noise immunity
- Full connection protection with 10 VDC up to 30 VDC
- High output frequency 600 kHz/2 MHz
- Optional: -40 °C up to +85 °C [-40 °F up to 185 °F], Pressure equalising membrane

www.wachendorff-automation.com/wdgi58c

Resolution	
Pulses per revolution PPR	up to 25000 PPR

Mechanical Data	
Flange	synchro flange
Flange material	aluminum
Housing material	die cast aluminum, powder coated
Flange diameter	Ø 58 mm [Ø 2.283"]
Cam mounting	pitch 69 mm [2.717 inches] (Accessory SP-3-00)

Shaft(s)	
Shaft material	stainless steel
Starting torque	approx. 1 Ncm [1.416 in-ozf] at ambient temperature
Shaft	Ø 10 mm [Ø 0.394"]
Shaft length	L: 20 mm [0.787"]
Max. Permissible shaft loading radial	200 N [20.394 kp]
Max. Permissible shaft loading axial	120 N [12.236 kp]

Bearings	
Bearings type	2 precision ball bearings
Nominale service life	1 x 10'9 revs. at 100 % rated shaft load 1 x 10'10 revs. at 40 % rated shaft load 1 x 10'11 revs. at 20 % rated shaft load
Max. operating speed	8000 rpm

Machinery Directive: basic data safety integrity level	
$MTTF_d$	200 a
Mission time (TM)	25 a
Nominale service life (L10h)	1 x 10'11 revs. at 20 % rated shaft load and 8000 rpm
Diagnostic coverage (DC)	0 %

Electrical Data	
Power supply/Current consumption	4,75 VDC up to 5,5 VDC: typ. 70 mA (100 mA only F05, P05)
Power supply/Current consumption	5 VDC up to 30 VDC: typ. 70 mA
Power supply/Current consumption	10 VDC up to 30 VDC: typ. 70 mA (100 mA only F24, P24, 645)
Operating principle	optical
Output circuit	TTL TTL, RS422 compatible, inv. HTL HTL, inv. 1 Vpp sin/cos
Pulse frequency	TTL ≤ 5000 ppr: max. 200 kHz HTL ≤ 5000 ppr: max. 200 kHz TTL more than 1200 ppr: max. 2 MHz HTL more than 1200 ppr: max. 600 kHz 1 Vpp sin/cos: max. 100 kHz
Channels	AB ABN and inverted signals
Load	max. 40 mA / channel @ 1 Vpp sin/cos: min. 120 Ohm
Circuit protection	circuit type F24, H24, P24, R24 only

Accuracy	
Phase offset	90° ± max. 7.5 % of the period duration
pulse-/pause-ratio	≤5000 ppr: 50 % ± max. 7 % Output circuits F24, P24, F05, P05, 645: 50 % ± max. 10 %

Environmental data	
ESD (DIN EN 61000-4-2):	8 kV
Burst (DIN EN 61000-4-4):	2 kV
includes EMC:	DIN EN 61000-6-2 DIN EN 61000-6-3
Vibration: (DIN EN 60068-2-6)	50 m/s^2 (10 Hz up to 2000 Hz)
Shock: (DIN EN 60068-2-27)	1000 m/s^2 (6 ms)
Electrial Safety:	according DIN VDE 0160

Duty information	
Customs tariff number:	90318020
Country of origin:	Germany

General Data	
Weight	approx. 230 g [8.113 oz]
Connections	cable or connector outlet
Protection rating (EN 60529)	Housing: IP65, IP67; shaft sealed: IP65
Operating temperature	Connector: -40 °C up to +85 °C, Cable: -20 °C up to +80 °C (Option ACA: -40 °C up to +85 °C). Connector: -40 °F up to +185 °F, Cable: -4 °F up to +176 °F, Option ACA: -40 °F up to +185 F° 1 Vpp: -10 °C up to +70 °C [+14 °F up to +158 °F]

Storage temperature	Connector: -40 °C up to +85 °C, Cable: -30 °C up to +80 °C (Option ACA: -40 °C up to +85 °C) Connector: -40 °F up to +185 °F, cable: -22 °F up to +176 °F, (Option ACA: -40 °F up to +185 °F)

More Information
General technical data and safety instructions **http://www.wachendorff-automation.com/gtd**
Options **http://www.wachendorff-automation.com/acc**

WDGI 58C: Cable connection K2, L2, axial, with 2 m cable

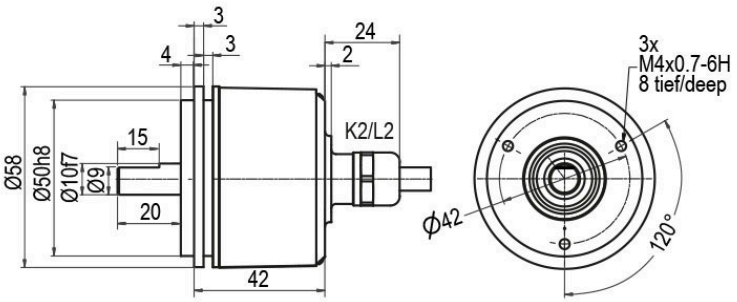

Alle Abmessungen in mm / All dimensions in mm

Description		ABN inv. poss.
K2	axial, shield not connected	•
L2	axial, shield connected to encoder housing	•

Assignments

	K2, L2	K2, L2	L2
Circuit	F05, H05, F24, H24, H30	P05, R05, P24, R24, 245, 645, R30	SIN
GND	WH	WH	WH
(+) Vcc	BN	BN	BN
A	GN	GN	GN
B	YE	YE	GY
N	GY	GY	-
-	-	-	-
A inv.	-	RD	YE
B inv.	-	BK, (BU at ACA)	PK
N inv.	-	VT	-
Shield	flex	flex	flex

WDGI 58C: Cable connection K3, L3, radial, with 2 m cable

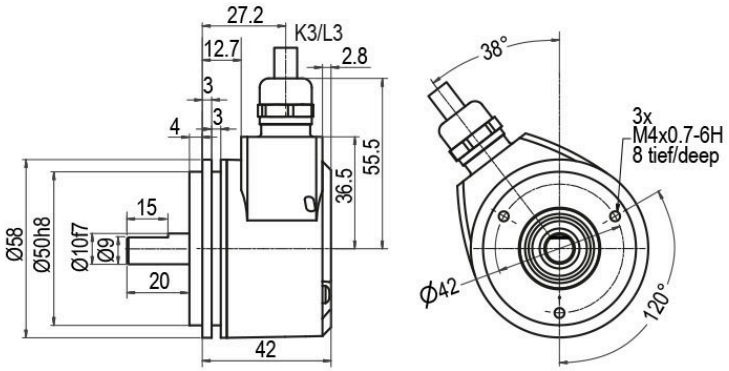

Alle Abmessungen in mm / All dimensions in mm

Description		ABN inv. poss.
K3	radial, shield not connected	•
L3	radial, shield connected to encoder housing	•

Assignments			
	K3, L3	**K3, L3**	**L3**
Circuit	F05, H05, F24, H24, H30	P05, R05, P24, R24, 245, 645, R30	SIN
GND	WH	WH	WH
(+) Vcc	BN	BN	BN
A	GN	GN	GN
B	YE	YE	GY
N	GY	GY	-
-	-	-	-
A inv.	-	RD	YE
B inv.	-	BK, (BU at ACA)	PK
N inv.	-	VT	-
Shield	flex	flex	flex

WDGI 58C: Connector (M16x0.75) SI, axial, 5-, 6-, 8-, 12-pin

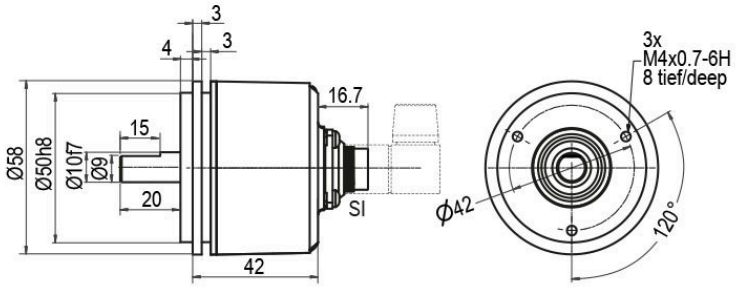

Alle Abmessungen in mm / All dimensions in mm

Description		ABN inv. poss.
SI5	axial, 5-pin, Connector connected to encoder housing	-
SI6	axial, 6-pin, Connector connected to encoder housing	-
SI8	axial, 8-pin, Connector connected to encoder housing	•
SI12	axial, 12-pin, Connector connected to encoder housing	•

Assignments

	SI5	SI6	SI8	SI8	SI12	SI12
	5-pin	6-pin	8-pin	8-pin	12-pin	12-pin
	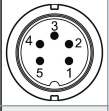	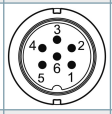	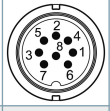	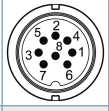	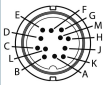	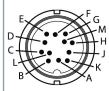
Circuit	F05, H05, F24, H24, H30	F05, H05, F24, H24, H30	P05, R05, P24, R24, R30, 245, 645	SIN	P05, R05, P24, R24, 245, 645, R30	SIN
GND	1	6	1	1	K, L	K, L
(+) Vcc	2	1	2	2	M, B	M, B
A	3	2	3	3	E	E
B	4	4	4	4	H	H
N	5	3	5	-	C	-
-	-	-	-	-	-	-
A inv.	-	-	6	6	F	F
B inv.	-	-	7	7	A	A
N inv.	-	-	8	-	D	-
n. c.	-	5	-	5, 8	G, J	D, G, J
Shield	-	-	-	-	-	-

WDGI 58C: Connector (M16x0.75) SH, radial, 5-, 6-, 8-, 12-pin

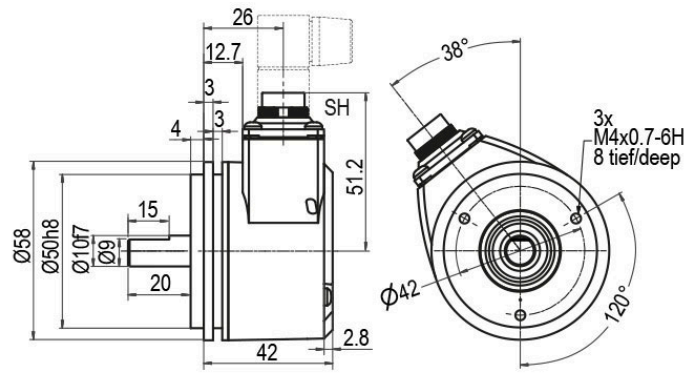

Alle Abmessungen in mm / All dimensions in mm

Description		ABN inv. poss.
SH5	radial, 5-pin, Connector connected to encoder housing	-
SH6	radial, 6-pin, Connector connected to encoder housing	-
SH8	radial, 8-pin, Connector connected to encoder housing	•
SH12	radial, 12-pin, Connector connected to encoder housing	•

Assignments						
	SH5	**SH6**	**SH8**	**SH8**	**SH12**	**SH12**
	5-pin	**6-pin**	**8-pin**	**8-pin**	**12-pin**	**12-pin**
	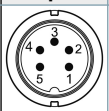	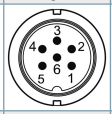	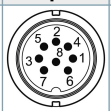	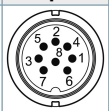	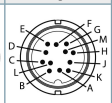	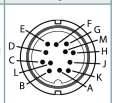
Circuit	F05, H05, F24, H24, H30	F05, H05, F24, H24, H30	P05, R05, P24, R24, R30, 245, 645	SIN	P05, R05, P24, R24, 245, 645, R30	SIN
GND	1	6	1	1	K, L	K, L
(+) Vcc	2	1	2	2	M, B	M, B
A	3	2	3	3	E	E
B	4	4	4	4	H	H
N	5	3	5	-	C	-
-	-	-	-	-	-	-
A inv.	-	-	6	6	F	F
B inv.	-	-	7	7	A	A
N inv.	-	-	8	-	D	-
n. c.	-	5	-	5, 8	G, J	D, G, J
Shield	-	-	-	-	-	-

WDGI 58C: Connector (M16x0.75) S2, axial, 7-pin

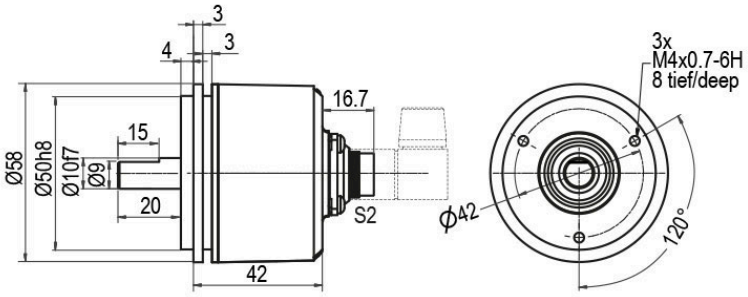

Alle Abmessungen in mm / All dimensions in mm

Description		ABN inv. poss.
S2	axial, 7-pin, Connector connected to encoder housing	-

Assignments	
	S2
	7-pin
	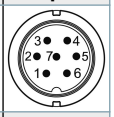
Circuit	F05, H05, F24, H24, H30
GND	1
(+) Vcc	2
A	3
B	4
N	5
-	-
A inv.	-
B inv.	-
N inv.	-
n. c.	6, 7
Shield	-

WDGI 58C: Connector (M16x0.75) S3, radial, 7-pin

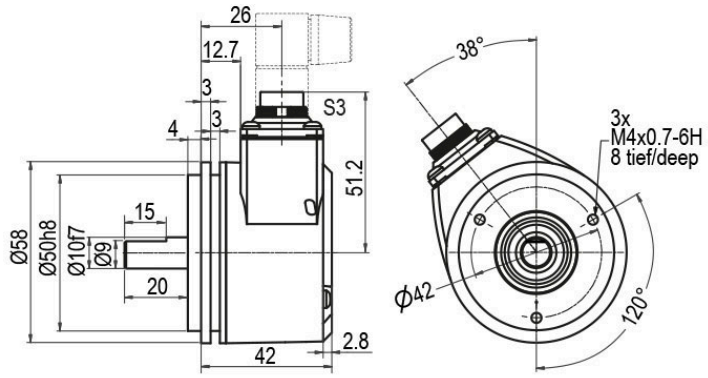

Alle Abmessungen in mm / All dimensions in mm

Description		ABN inv. poss.
S3	radial, 7-pin, Connector connected to encoder housing	-

Assignments	
	S3
	7-pin
	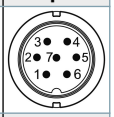
Circuit	F05, H05, F24, H24, H30
GND	1
(+) Vcc	2
A	3
B	4
N	5
-	-
A inv.	-
B inv.	-
N inv.	-
n. c.	6, 7
Shield	-

WDGI 58C: Connector (M23) S4, axial, 12-pin

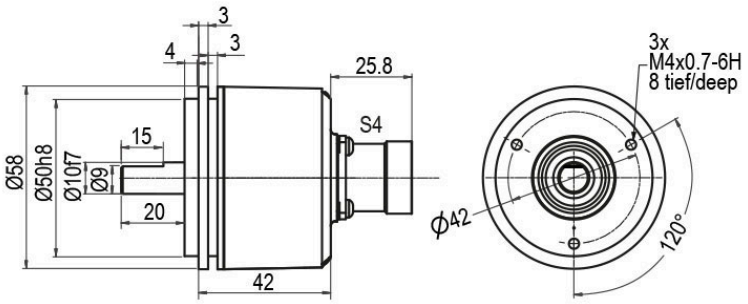

Alle Abmessungen in mm / All dimensions in mm

Description		ABN inv. poss.
S4	axial, 12-pin, Connector connected to encoder housing	•

Assignments			
	S4	**S4**	**S4**
	12-pin	**12-pin**	**12-pin**
	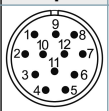	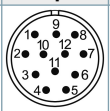	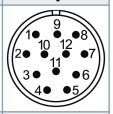
Circuit	F05, H05, F24, H24, H30	P05, R05, P24, R24, 245, 645, R30	SIN
GND	10	10	10
(+) Vcc	12	12	12
A	5	5	5
B	8	8	8
N	3	3	-
-	-	-	-
A inv.	-	6	6
B inv.	-	1	1
N inv.	-	4	-
n. c.	1, 2, 4, 6, 7, 9, 11	2, 7, 9, 11	2, 3, 4, 7, 9, 11
Shield	-	-	-

WDGI 58C: Connector (M23) S5, radial, 12-pin

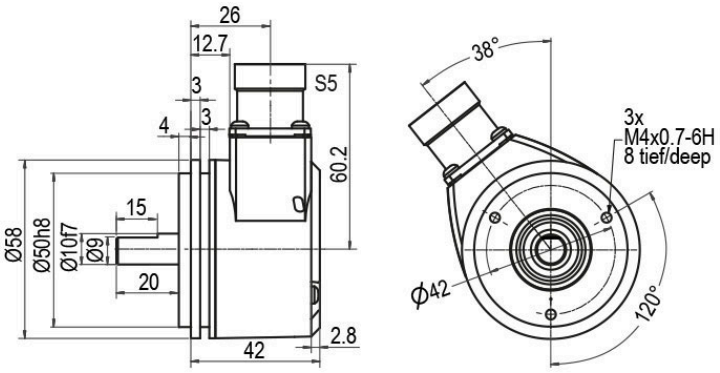

Alle Abmessungen in mm / All dimensions in mm

Description		ABN inv. poss.
S5	radial, 12-pin, Connector connected to encoder housing	•

Assignments			
	S5	**S5**	**S5**
	12-pin	**12-pin**	**12-pin**
	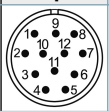	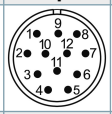	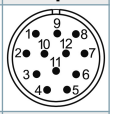
Circuit	F05, H05, F24, H24, H30	P05, R05, P24, R24, 245, 645, R30	SIN
GND	10	10	10
(+) Vcc	12	12	12
A	5	5	5
B	8	8	8
N	3	3	-
-	-	-	-
A inv.	-	6	6
B inv.	-	1	1
N inv.	-	4	-
n. c.	1, 2, 4, 6, 7, 9, 11	2, 7, 9, 11	2, 3, 4, 7, 9, 11
Shield	-	-	-

WDGI 58C: Connector (M23) S4R, axial, 12-pin (clockwise)

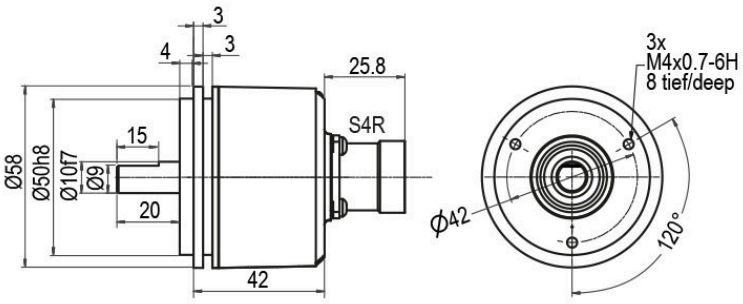

Alle Abmessungen in mm / All dimensions in mm

Description		ABN inv. poss.
S4R	axial, 12-pin, Connector connected to encoder housing	•

Assignments			
	S4R	**S4R**	**S4R**
	12-pin	**12-pin**	**12-pin**
	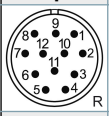	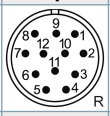	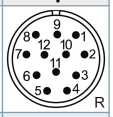
Circuit	F05, H05, F24, H24, H30	P05, R05, P24, R24, 245, 645, R30	SIN
GND	10	10	10
(+) Vcc	12	12	12
A	5	5	5
B	8	8	8
N	3	3	-
-	-	-	-
A inv.	-	6	6
B inv.	-	1	1
N inv.	-	4	-
n. c.	1, 2, 4, 6, 7, 9, 11	2, 7, 9, 11	2, 3, 4, 7, 9, 11
Shield	-	-	-

WDGI 58C: Connector (M23) S5R, radial, 12-pin (clockwise)

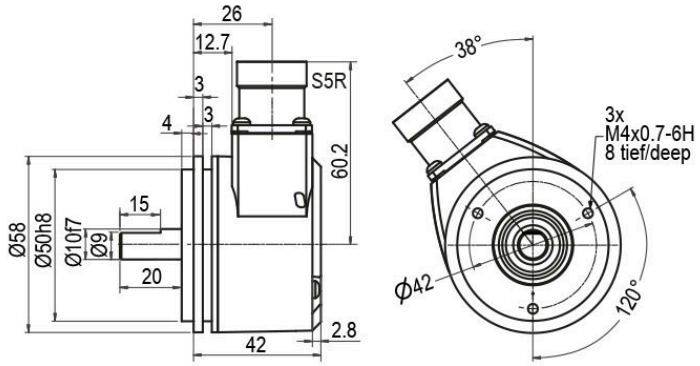

Alle Abmessungen in mm / All dimensions in mm

Description		ABN inv. poss.
S5R	radial, 12-pin, Connector connected to encoder housing	•

Assignments			
	S5R	**S5R**	**S5R**
	12-pin	**12-pin**	**12-pin**
	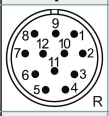	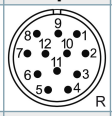	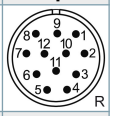
Circuit	F05, H05, F24, H24, H30	P05, R05, P24, R24, 245, 645, R30	SIN
GND	10	10	10
(+) Vcc	12	12	12
A	5	5	5
B	8	8	8
N	3	3	-
-	-	-	-
A inv.	-	6	6
B inv.	-	1	1
N inv.	-	4	-
n. c.	1, 2, 4, 6, 7, 9, 11	2, 7, 9, 11	2, 3, 4, 7, 9, 11
Shield	-	-	-

WDGI 58C: Sensor-connector (M12x1) SB, axial, 4-, 5-, 8-, 12-pin

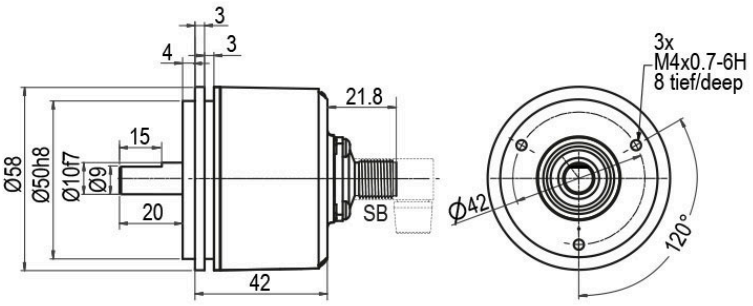

Alle Abmessungen in mm / All dimensions in mm

Description		ABN inv. poss.
SB4	axial, 4-pin, Connector connected to encoder housing	-
SB5	axial, 5-pin, Connector connected to encoder housing	-
SB8	axial, 8-pin, Connector connected to encoder housing	•
SB12	axial, 12-pin, Connector connected to encoder housing	•

Assignments					
	SB4	**SB5**	**SB8**	**SB8**	**SB12**
	4-pin	**5-pin**	**8-pin**	**8-pin**	**12-pin**
	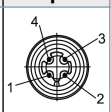	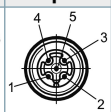	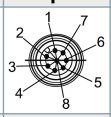	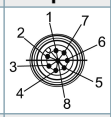	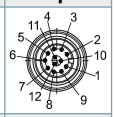
Circuit	F05, H05, F24, H24, H30	F05, H05, F24, H24, H30	P05, R05, P24, R24, R30, 245, 645	SIN	P05, R05, P24, R24, 245, 645, R30
GND	3	3	1	1	3
(+) Vcc	1	1	2	2	1
A	2	4	3	3	4
B	4	2	4	5	6
N	-	5	5	-	8
-	-	-	-	-	-
A inv.	-	-	6	4	9
B inv.	-	-	7	6	7
N inv.	-	-	8	-	10
n. c.	-	-	-	7, 8	2, 5, 11, 12
Shield	-	-	-	-	-

WDGI 58C: Sensor-connector (M12x1) SC, radial, 4-, 5-, 8-, 12-pin

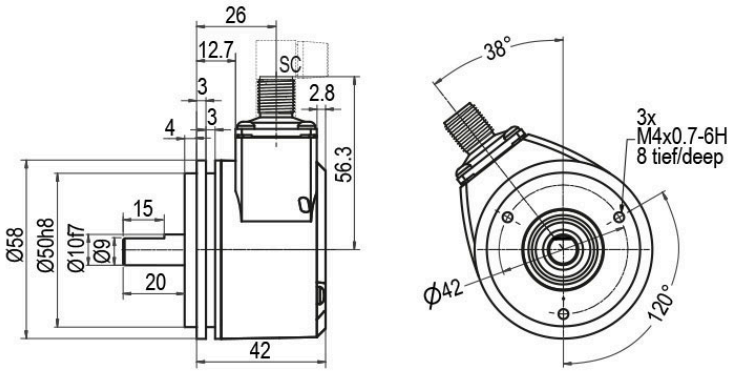

Alle Abmessungen in mm / All dimensions in mm

Description		ABN inv. poss.
SC4	radial, 4-pin, Connector connected to encoder housing	-
SC5	radial, 5-pin, Connector connected to encoder housing	-
SC8	radial, 8-pin, Connector connected to encoder housing	•
SC12	radial, 12-pin, Connector connected to encoder housing	•

Assignments

	SC4	SC5	SC8	SC8	SC12
	4-pin	5-pin	8-pin	8-pin	12-pin
	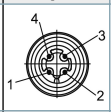	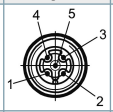	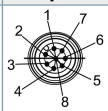	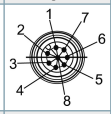	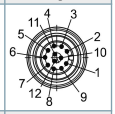
Circuit	F05, H05, F24, H24, H30	F05, H05, F24, H24, H30	P05, R05, P24, R24, R30, 245, 645	SIN	P05, R05, P24, R24, 245, 645, R30
GND	3	3	1	1	3
(+) Vcc	1	1	2	2	1
A	2	4	3	3	4
B	4	2	4	5	6
N	-	5	5	-	8
-	-	-	-	-	-
A inv.	-	-	6	4	9
B inv.	-	-	7	6	7
N inv.	-	-	8	-	10
n. c.	-	-	-	7, 8	2, 5, 11, 12
Shield	-	-	-	-	-

Options

Low-friction bearings	Order key
The encoder WDGI 58C is also available as a particularly smooth-running low-friction encoder. The starting torque is thereby changed to ≤ 0.5 Ncm [0.708 in-ozf] and the protection class at the shaft input to IP50.	**AAC**

Low temperature	Order key
The encoder WDGI 58C with the output circuit types F24, H24, P24, R24, F05, H05, P05, R05, 245, 645 is also available with the extended temperature range -40 °C up to +85 °C [-40 °F up to +185 °F] (measured at the flange).	**ACA**

Pressure equalising membrane	Order key
The WDGI 58C shaft encoder is also optionally available with a pressure equalising membrane. This prevents water from penetrating into the encoder housing in the case of high air humidity. The IP67 protection level, temperature range and salt spray resistance are maintained. Resistant to chemicals and solvents in accordance with DIN EN ISO 2812-1.	**ACR**

Cable length	Order key
The encoder WDGI 58C can be supplied with more than 2 m cable. The maximum cable length depends on the supply voltage and the frequency; see https://www.wachendorff-automation.com/download-gtd-incremental-encoders/ Please extend the standard order code with a three figure number, specifying the cable length in decimetres. Example: 5 m cable = 050	**XXX = Decimeter**

Example Order No.	Type	Your encoder
WDGI 58C	WDGI 58C	WDGI 58C
	Shaft	
10	10	
	Pulses per revolution PPR:	
5000	2, 5, 10, 15, 20, 25, 30, 36, 40, 48, 50, 60, 64, 72, 90, 100, 120, 125, 128, 150, 160, 180, 200, 216, 236, 240, 250, 254, 256, 300, 314, 320, 360, 400, 500, 512, 571, 600, 625, 720, 750, 768, 800, 900, 1000, 1024, 1200, 1250, 1270, 1440, 1500, 1800, 2000, 2048, 2400, 2500, 2880, 3000, 3600, 4000, 4096, 4685, 5000, 5760, 6000, 7200, 7500, 8000, 8192, 10000, 10240, 12000, 12500, 15000, 16384, 20000, 20480, 25000 1 Vpp Sin/Cos only 1024, 2048 Other PPRs on request	
	Channels:	
ABN	AB, ABN (SIN: AB)	
	Output circuit	

	Resolution PPR	Power supply VDC	Output circuit	-	Order key
H24	up to 2500	5 - 30	HTL (TTL at 5 VDC)	-	H30
		5 - 30	HTL, inv. (TTL/RS422 comp. at 5 VDC)	-	R30
	up to 5000	4.75 - 5.5	TTL	-	H05
		4.75 - 5.5	TTL, RS422 comp., inverted	-	R05
		10 - 30	HTL	-	H24
		10 - 30	HTL inverted	-	R24
		10 - 30	TTL, RS422 comp., inverted	-	245
	(higher frequency) 1200 up to 25000	4.75 - 5.5	TTL	-	F05
		4.75 - 5.5	TTL, RS422 comp., inverted	-	P05
		10 - 30	HTL	-	F24
		10 - 30	HTL inverted	-	P24
		10 - 30	TTL, RS422 comp., inverted	-	645
	1024, 2048	4.75 - 5.5	1 Vpp sin/cos	-	SIN

	Electrical connections			
	Description	**ABN inv. poss.**	**Order key**	
	Cable: length (2 m standard, WDG 58T: 1 m)			
	axial, shield not connected	•	K2	
	axial, shield connected to encoder housing	•	L2	
	radial, shield not connected	•	K3	
	radial, shield connected to encoder housing	•	L3	
	Connector: (shield connected to encoder housing)			
	connector, M16x0.75, 5-pin, axial	-	SI5	
	connector, M16x0.75, 5-pin, radial	-	SH5	
	connector, M16x0.75, 6-pin, axial	-	SI6	
	connector, M16x0.75, 6-pin, radial	-	SH6	
	connector, M16x0.75, 8-pin, axial	•	SI8	
	connector, M16x0.75, 8-pin, radial	•	SH8	
	connector, M16x0.75, 12-pin, axial	•	SI12	
K2	connector, M16x0.75, 12-pin, radial	•	SH12	
	connector, M16x0.75, 7-pin, axial	-	S2	
	connector, M16x0.75, 7-pin, radial	-	S3	
	connector, M23, 12-pin, axial	•	S4	
	connector, clockwise pin count, M23, 12-pin, axial	•	S4R	
	connector, M23, 12-pin, radial	•	S5	
	connector, clockwise pin count, M23, 12-pin, radial	•	S5R	
	sensor-connector, M12x1, 4-pin, axial	-	SB4	
	sensor-connector, M12x1, 4-pin, radial	-	SC4	
	sensor-connector, M12x1, 5-pin, axial	-	SB5	
	sensor-connector, M12x1, 5-pin, radial	-	SC5	
	sensor-connector, M12x1, 8-pin, axial	•	SB8	
	sensor-connector, M12x1, 8-pin, radial	•	SC8	
	sensor-connector, M12x1, 12-pin, axial	•	SB12	
	sensor-connector, M12x1, 12-pin, radial	•	SC12	

	Options		
	Description	**Order key**	
	Low-friction bearings	AAC	
	Low temperature	ACA	
	Pressure equalising membrane	ACR	
	Without option	Empty	
	Cable length	XXX = Decimeter	

Example Order No.=	WDGI 58C	10	5000	ABN	H24	K2			WDGI 58C							**Your encoder**

For further information please contact our local distributor.
Here you find a list of our distributors worldwide.
https://www.wachendorff-automation.com/contact-en/wachendorff-world-wide/

Wachendorff Automation GmbH & Co. KG
Industriestrasse 7 • 65366 Geisenheim
Germany

Phone: +49 67 22 / 99 65 25
E-Mail: wdg@wachendorff.de
www.wachendorff-automation.de